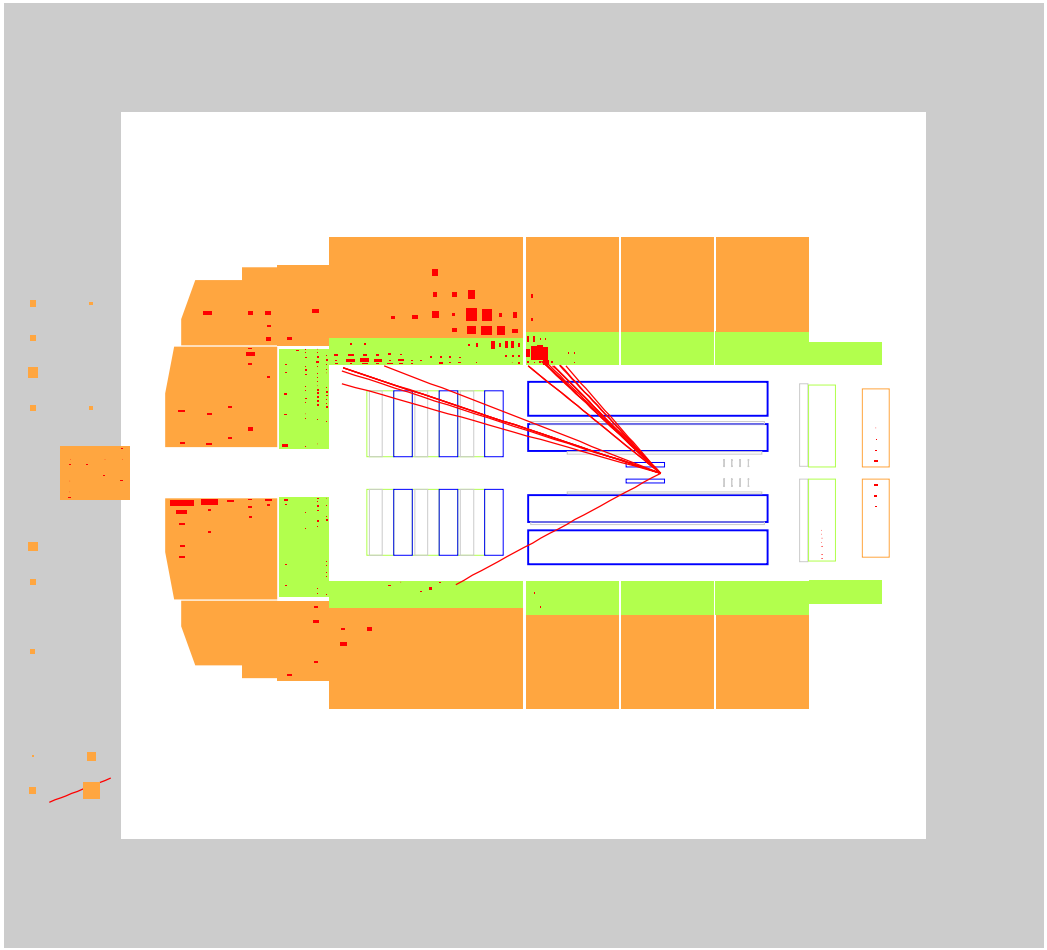
R
Z

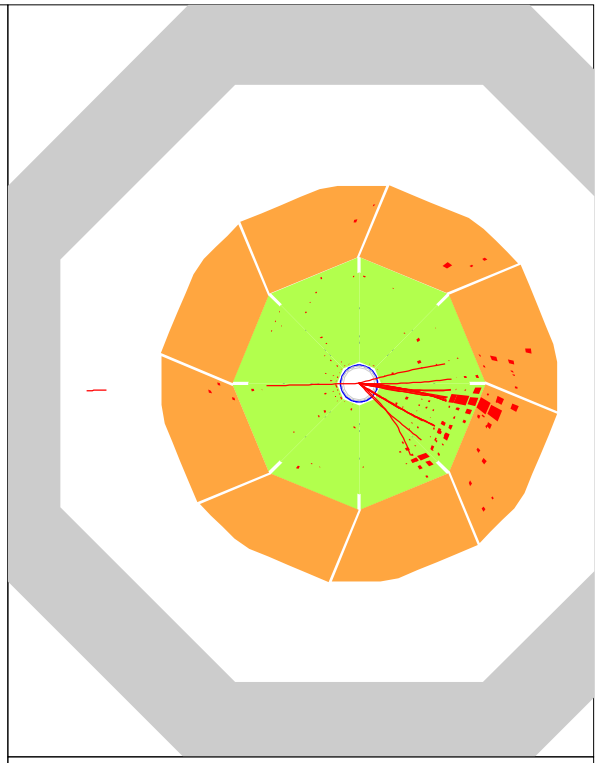

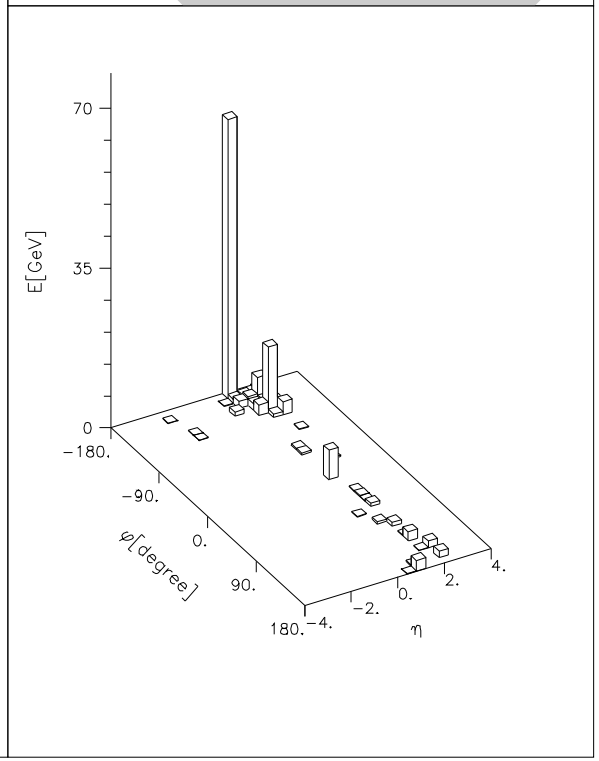
E[GeV]
70
35
0
−180.
−90.
0.
90.
180.
φ[degree]
−4.
−2.
0.
2.
4.
η